THIS COPY IS PROVIDED ON A RESTRICTED BASIS AND IS NOT TO BE USED IN ANY WAY DETRIMENTAL TO THE INTERESTS OF PANDUIT CORP.

PANDUIT P/N	WEIGHT
CBXF12**-AY	3.3 LB/10 PCS (1496.8 g/10 PCS)

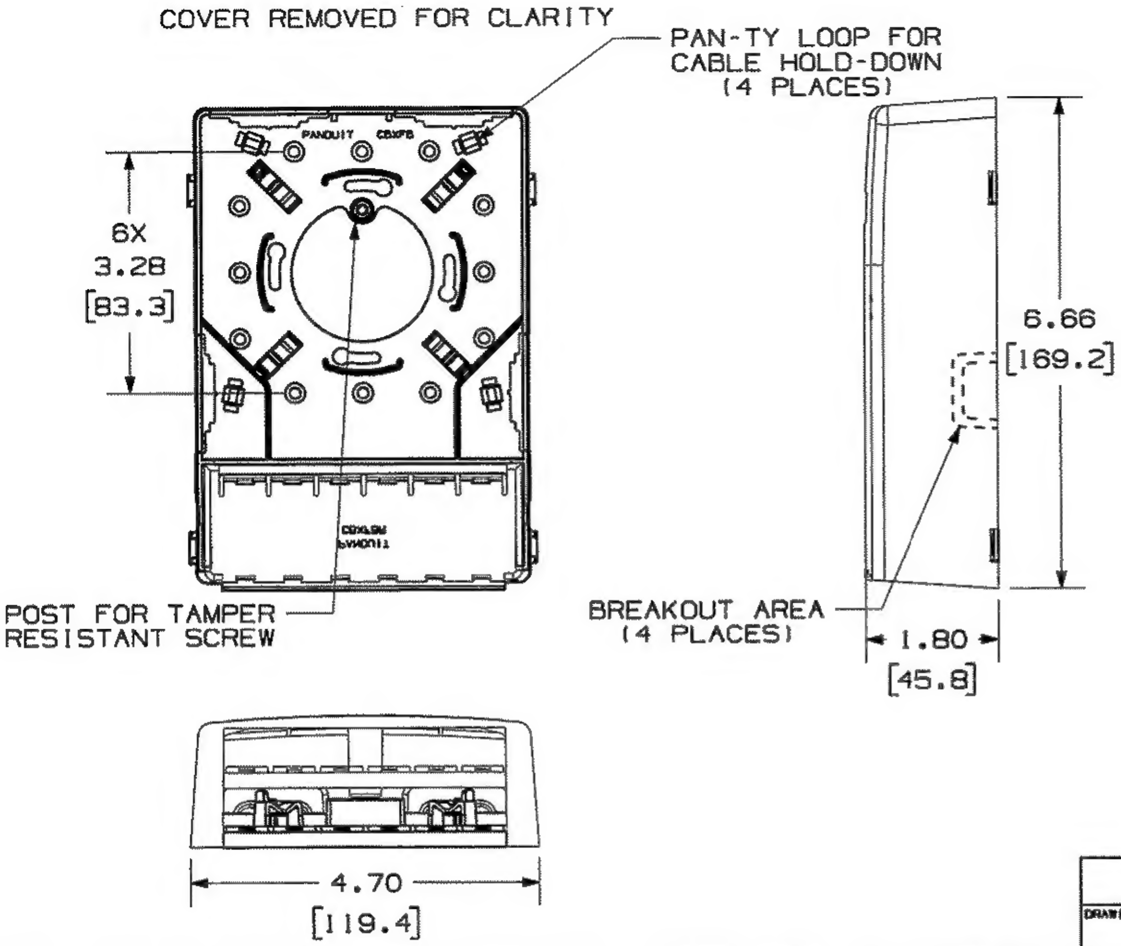

NOTES:

1. SEE CURRENT CATALOG FOR ADDITIONAL PART NUMBER SUFFIXES TO INDICATE COLOR AND OR PACKAGE QUANTITY.
2. SEE CATALOG FOR A COMPLETE LIST OF PARTS APPLICABLE FOR USE WITH THIS PART.
3. DIMENSIONS IN PARENTHESES ARE IN METRIC.
4. ALSO INCLUDED WITH BOX:
   - 1- BOX BASE
   - 1- BOX COVER
   - 1- BRIDGE
   - 2- PLT1.5I-C PAN-TY
   - 1- LABEL/ LABEL COVER
   - 2- MOUNTING SCREW
   - 1- COVER SCREW (USED TO SECURE COVER TO BASE)
   - 2- STRIP OF 1.00" X .75" FOAM TAPE FOR MOUNTING
   - 1- STRIP OF 3.00" X .75" FOAM TAPE FOR MOUNTING
5. BREAKOUTS DESIGNED TO ACCEPT LD3/LDP3, LD5/LDP5, OR LD10/LDP10 RACEWAY.
6. BASE MATERIAL THICKNESS: .090[2.29].

NO WARRANTY, EXPRESSED OR IMPLIED, IS MADE BY PANDUIT WITH RESPECT TO ADHESIVE BOND PERFORMANCE. AMONG OTHER THINGS, THE CONDITIONS UNDER WHICH THESE MOUNTS MAY BE APPLIED AND/OR THE SURFACE TO WHICH THEY MAY BE APPLIED ARE BEYOND PANDUIT'S CONTROL.

REV	DATE	BY	CHK	DESCRIPTION	ECN - R	CUST	SUP	OTH
R	1-19-07	JsP	[signature]	RELEASED TO PRODUCTION	02479-125 [signature]	[signature]		

NETWORK SYSTEMS
JAN 25 [illegible]
ENGINEERING DEPT

DRAWING FILENAME: M02479ES_DC125_00A.PRT

SIZE: A

MINI-COM 12 POSITION MULTI-MEDIA FIBER SURFACE MOUNT BOX CUSTOMER DRAWING

PANDUIT™ CORP.
TINLEY PARK, ILL 60477

THIRD ANGLE PROJECTION

ALL DIMENSIONS ARE GIVEN IN INCHES, UNLESS OTHERWISE SPECIFIED.
DIMENSIONAL TOLERANCES ARE:
(.X) ± (.XXX) ±.010(.3)
(.XX) ±.03(.8) ANGLES ±

DRAWN BY	JsP
DATE	1-19-07
CHK'D	[signature]
MATERIAL:	ABS
I.I. NUMBER	N/A
PRODUCT SPEC	N/A
WORK INSTRUCTION	N/A
SCALE	NONE
PART NO.	CBXF12**-AY
DRAWING NO.	02479-125